CSS-722

V1.0

INSTALLATION HW 1.0

A. Package Content

■ Controller x 1, wall hanger x 1, warranty card x 1, user manual x 1, kit pack x 1
Kit pack : screw x 4, screw anchors x 4, torx screw x 2, diode (1N4004) x 1, screwdriver x 1
8 pin cable x 1, 3 pin cable x 1, 2 pin cable x 1

B. Installation

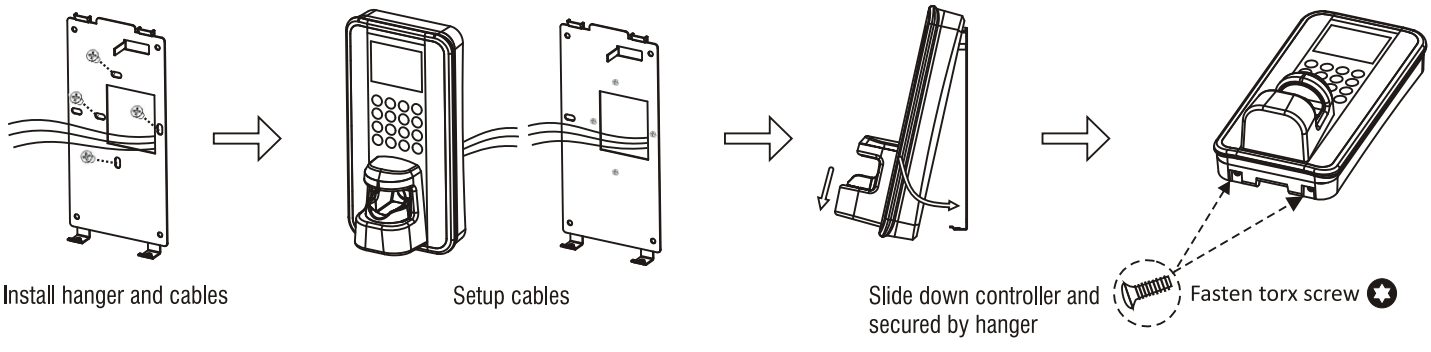

C. Specification

■ Dimension : 120 x 235 x 85 mm
■ Voltage range : 9 ~ 24 VDC
■ Current : Max 500mA (Recommed use 1A)
■ Wiegand range : Max 80M
■ TCP/IP range : Max 100M (add hub to extend)

D. Webserver Introduction

■ Default IP Address：192.168.0.66
■ Default WEB Account：admin
■ Default WEB Password：admin

E. Enter Administrator Mode Guide :

- Press F1 + F1 → enter default password 111111 → press #
  (Yes = # ; No = *)

- Add user
  Advance setup → user → add user single / continuous → enter UID → register card if any → register fingerprint if any → register password if any

- Delete user
  Advance setup → user → delete user → present card or enter UID → press #

- Setup IP address
  Advance setup → setting → IP config → enter IP / subnet / gatway

- Setup date&time
  Advance setup → setting → date & time → enter time HH/MM/SS (24hr) → press # → enter date YY/MM/DD
  (ex : 2010/6/30) = 100630 → press #

F. Controller Hanger Dimension

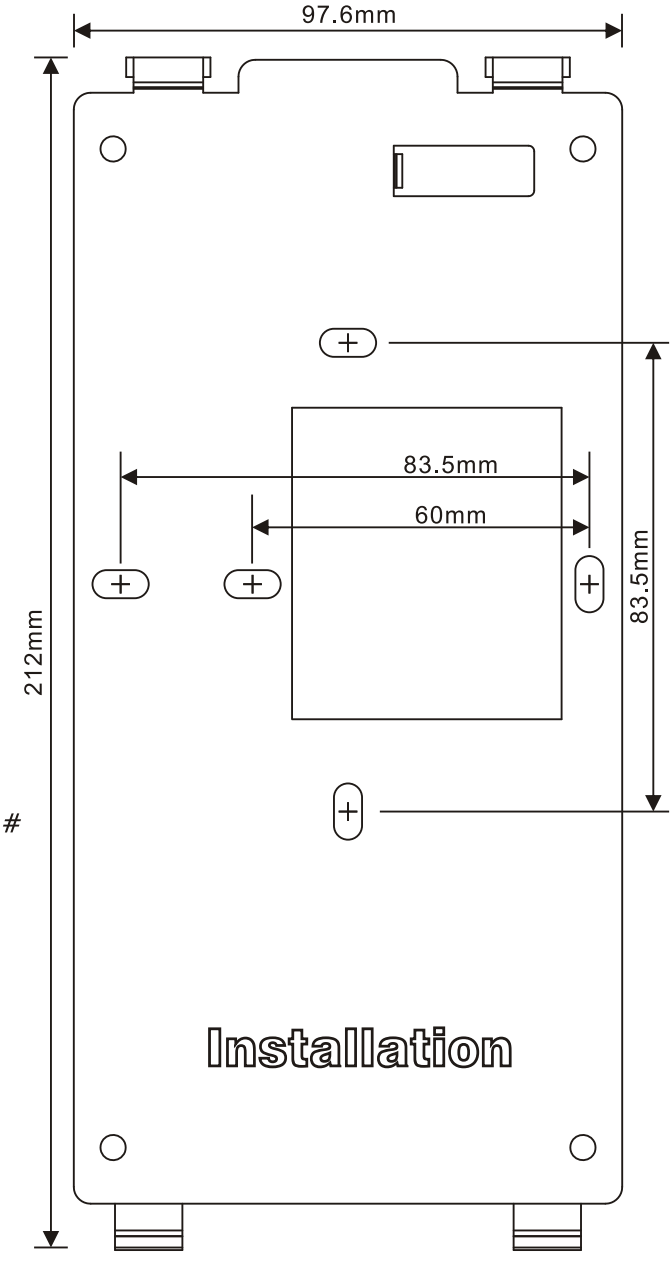

G. Application structure

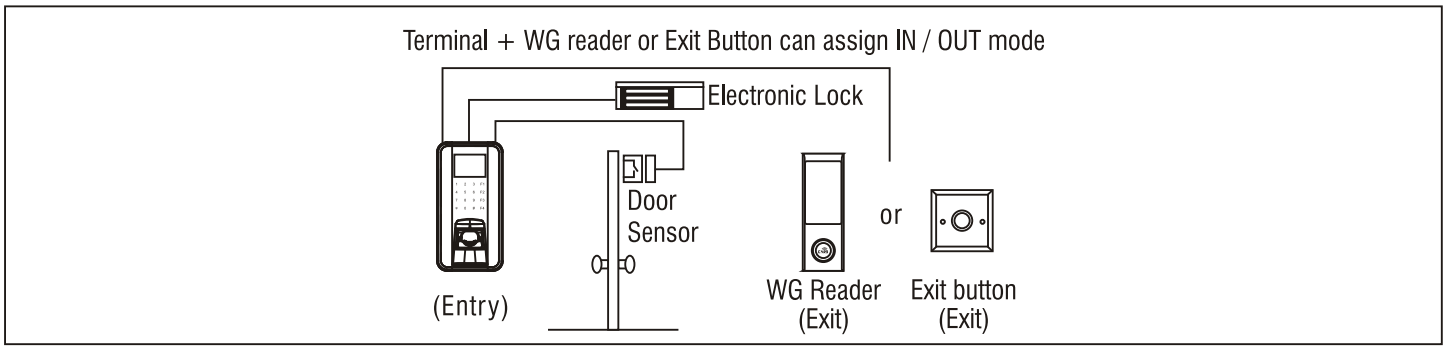

H. Controller Backside Introduction

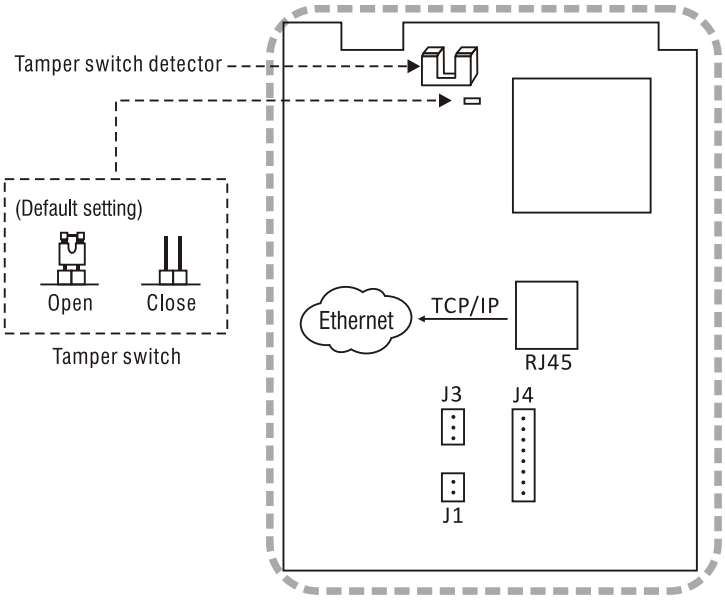

I. Cable Color Description

3 pin(J3)

COM	BLACK	Door Relay
NO	BROWN	
NC	GRAY	

2 pin(J1)

VIN	RED	DC Power Input 9~24VDC 1A
GND	BLACK	

8 pin(J4)

DOOR	YELLOW BLACK	Exit Button
SENS	WHITE BLACK	Door Sensor
FIRE	GREEN BLACK	Fire Alarm Input
OD0	RED WHITE	WG Output
OD1	BLACK WHITE	
GND	BLACK	GND
WID0	ORANGE	WG Intput
WID1	PINK BLACK	

Electronic lock and door relay connection

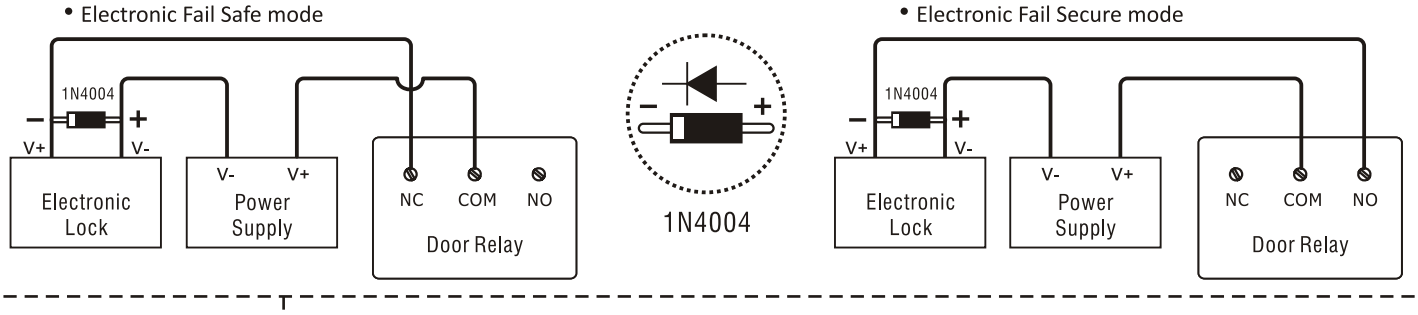

J. Cable Diagram

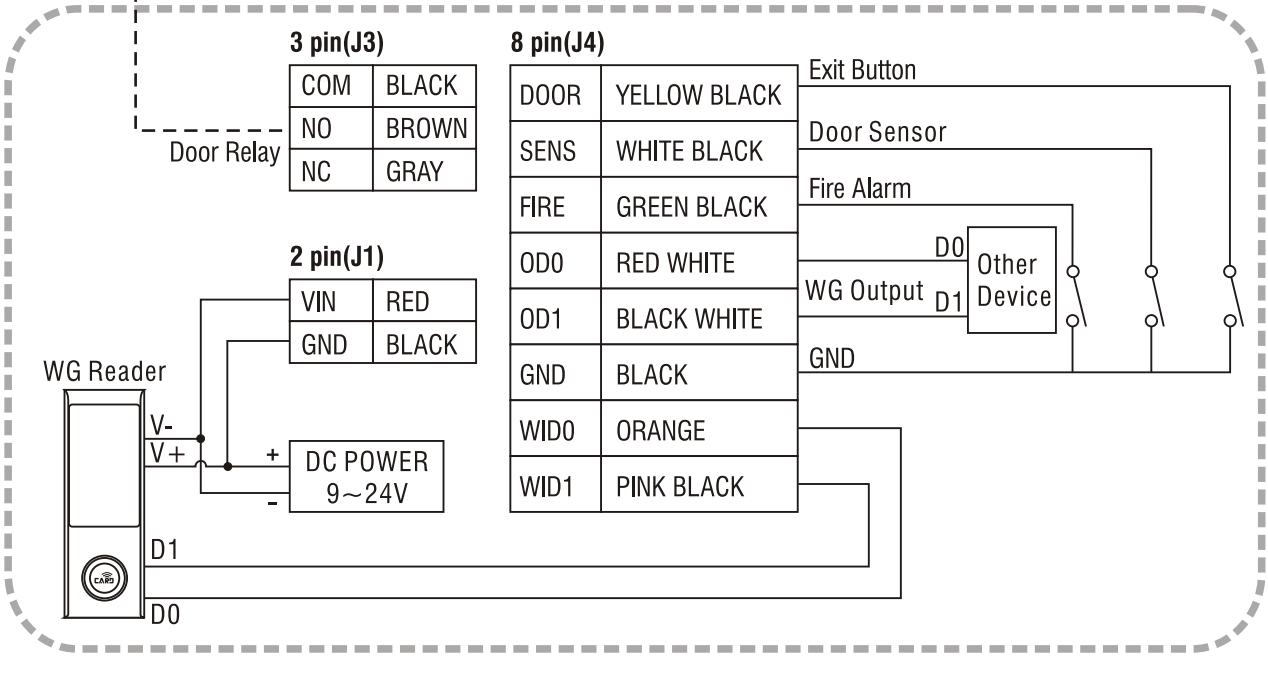

Note :

1. When registering finger vein please keeps scores at least 40 or above.
2. Maintenance scanning area : check if there is any object stuck at the area.
3. Log into advance web page to change finger vein scanner sensitivity level 1～5.
   Ex : http://192.168.0.66/FV.htm at the end of IP address add “ /FV.htm “

Please avoid below conditions when scanning finger vein :

1. Finger with dirt or bandage or ring.
2. Finger too thin or too wide. Recommend width 10 ～ 25 mm.
3. Finger too short (fingertip isn't able to touch front fingertip sensor point).
4. Serious anemia : not enough hemoglobin (Hb).
5. Return from cold environment finger is cold and numb.

Tips when verifying or registering finger vein :

1. During cold weather or when verification failed or when registration failed, try swinging hands several time to improve blood circulation till fingertip.
2. Avoid pushing finger too hard. Try to relax and place finger straight.

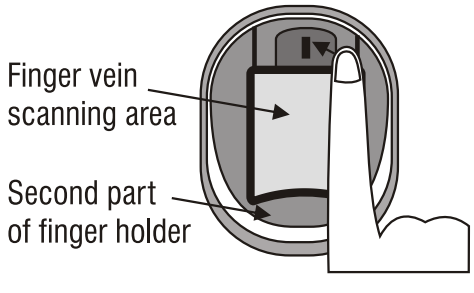

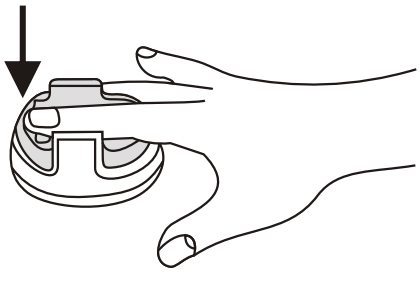

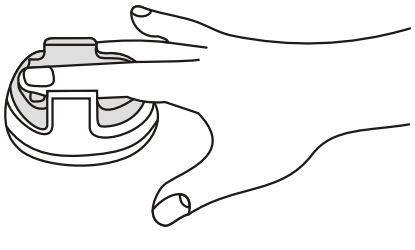

Place finger gently and horizontally

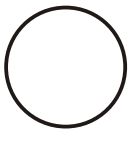

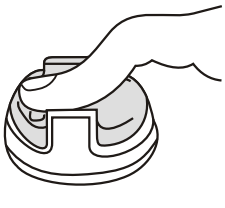

Avoid bending finger

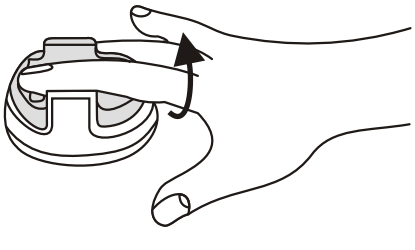
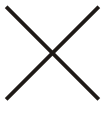
Avoid twisting finger